ALGEMENE AANWIJZINGEN BIJ HET GEBRUIK VAN: KETTINGEN EN KETTINGMATERIAAL

INSTRUCTIONS GÉNÉRALES D'UTILISATION : CHAÎNES DE LEVAGE ET MATERIEL DE CHAÎNES

Deze handleiding heeft tot doel iedere gebruiker van deze ketting te helpen hijsgereedschappen op een veilige en juiste wijze toe te passen. In overeenstemming met 2006/42/EG Bijlage IIa moet deze handleiding aan de gebruiker worden verstrekt en gekend zijn door de gebruiker alvorens het materiaal te gebruiken.

Nederlandstalige vertaling verkrijgbaar op eenvoudig verzoek.

Le but de ce manuel est d'aider chaque utilisateur de cette chaîne à l'utiliser de manière sûre et correcte. Conformément à l'annexe IIa de la directive 2006/42/CE, ce manuel doit être fourni à l'utilisateur et connu de l'utilisateur avant l'utilisation de l'équipement.
Traduction française disponible sur demande.

1) Description of weld-on transport rings KMAO

- Weld-on transport rings need to be welded onto machines in order to secure them.
- The ring bases are forged steel 1.0570 (St52-3) and sand blasted. Except the red ring, which is grade 8.

2) Instructions for welding and maintenance Welding :

- Welding must be done according to DIN 5817 resp. 15429, by a qualified welder according to EN 287-1.
- The surface on which the ring is to be welded has to be weldable, free from rust, paint and degreased prior to welding. It must be flat and must be able to transfer the load.
- For MIG welding, the gas-metal-arc process employs a consumable electrode that is deposited as weld metal according to EN 14341, for ex. G4Si 1. (Do not weld in the open air and during bad weather conditions like wind).
- For a manual welding, use an EN 2560 electrode, for ex. E5132 RR6. For the 1st pass, use a Ø2.5mm electrode and for the subsequent passes, use Ø 3.25 to 5mm electrodes.
- Before welding, angle the base, creating a small space in order to obtain a continual HR welding pass. First, one pass of 3 mm high is recommended, then a HR continual pass, and finally an allowance (process similar to an angle welding).
- To give enough strength to the welded transport ring, it is necessary that welds are at least according the dimensions in the table.
- The quality of the welding must be inspected by a competent person.
- It is preferable to proof load the ring and weld with a load of 1.25 x Lashing Capacity (LC) for lashing, or 2.5 x WLL for lifting.
- The welding must be continual on the front surfaces of the plinth. The cranks must be free of impurity (oil, grease, paint, etc.).
- Avoid contact between the red ring and the filler metal.
- Install components so that no interfering of pivot or handling occur.

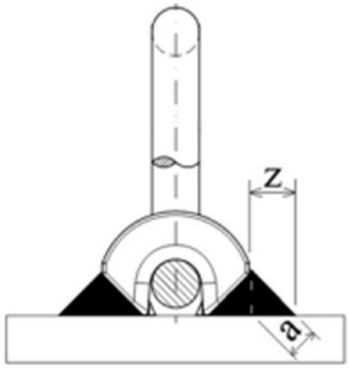

Weld size a	Weld size z
8	11
9	13
11	16
14	20
16	21
17	23

Vabotec Bvba
Starrenhoflaan 33
2950 Kapellen Belgium
www.vabotec.com

TEL 0032 3 660 08 94
FAX 0032 3 660 08 96
info@vabotec.be

3) Maintenance :

• The transport rings and their welds have to be regularly checked visually. They must be inspected at least annually by an expert.

• Do not use transport rings that are rusted, bent, show any visual damage, or have been immersed in an acidic solution. A visual inspection is necessary before use.

4) Use limitations

• During engineering and use, please respect the current load rules (EN 12195 – 1, 2, 3, 4)

• Never exceed the WLL indicated on the ring.

• Fix the transport rings in order to prevent any damage with the load system.

• Fix the transport rings so that the load is stable and not outlying.

• Never machine or grind the rings. Modifications or repair must only be carried out by the manufacturer.

• The transport rings must not be used in contact with basics or acids.

• Temperature reduces the WLL according to the following values :

-40°C - +200°C : 0%

+200°C - +300°C : -10%

+300°C - +400°C : -25%

• The transport rings must not be used at temperatures above or below these values.

• The selection of the transport ring depends on the angles of the used slings.

• The eye must move freely to adapt the sling angle.

• The force applied on the transport rings cannot be higher than the WLL mentioned in the catalogue. The WLL corresponds to the worst condition, i.e. α = 90°.

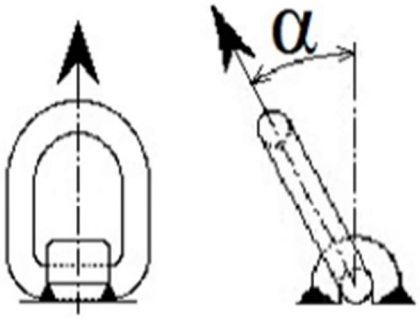

RIGHT

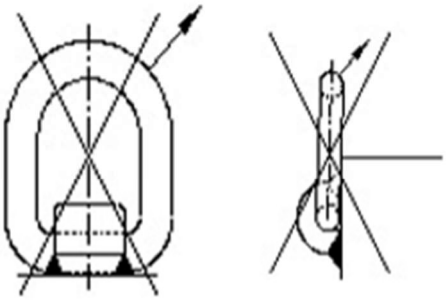

WRONG

Vabotec Bvba
Starrenhoflaan 33
2950 Kapellen Belgium
www.vabotec.com

TEL 0032 3 660 08 94
FAX 0032 3 660 08 96
info@vabotec.be